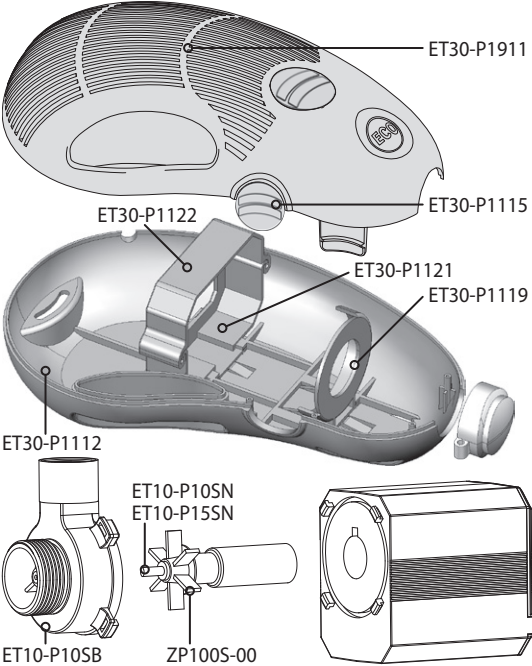
ET30-P1911
ET30-P1115
ET30-P1122
ET30-P1121
ET30-P1119
ET30-P1112
ET10-P10SN
ET10-P15SN
ET10-P10SB
ET10-P15SB
ZP100S-00
ZP150S-00

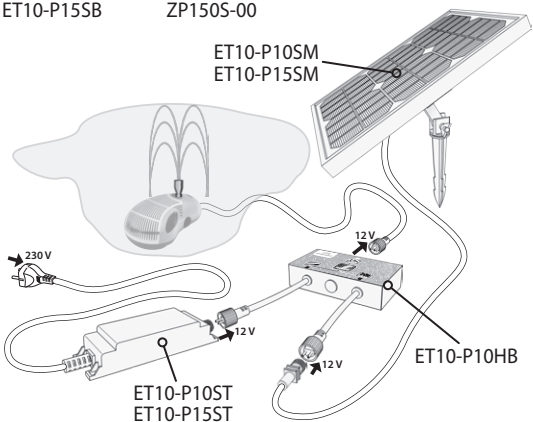
ET10-P10SM
ET10-P15SM
230 V
12 V
12 V
12 V
ET10-P10HB
ET10-P10ST
ET10-P15ST