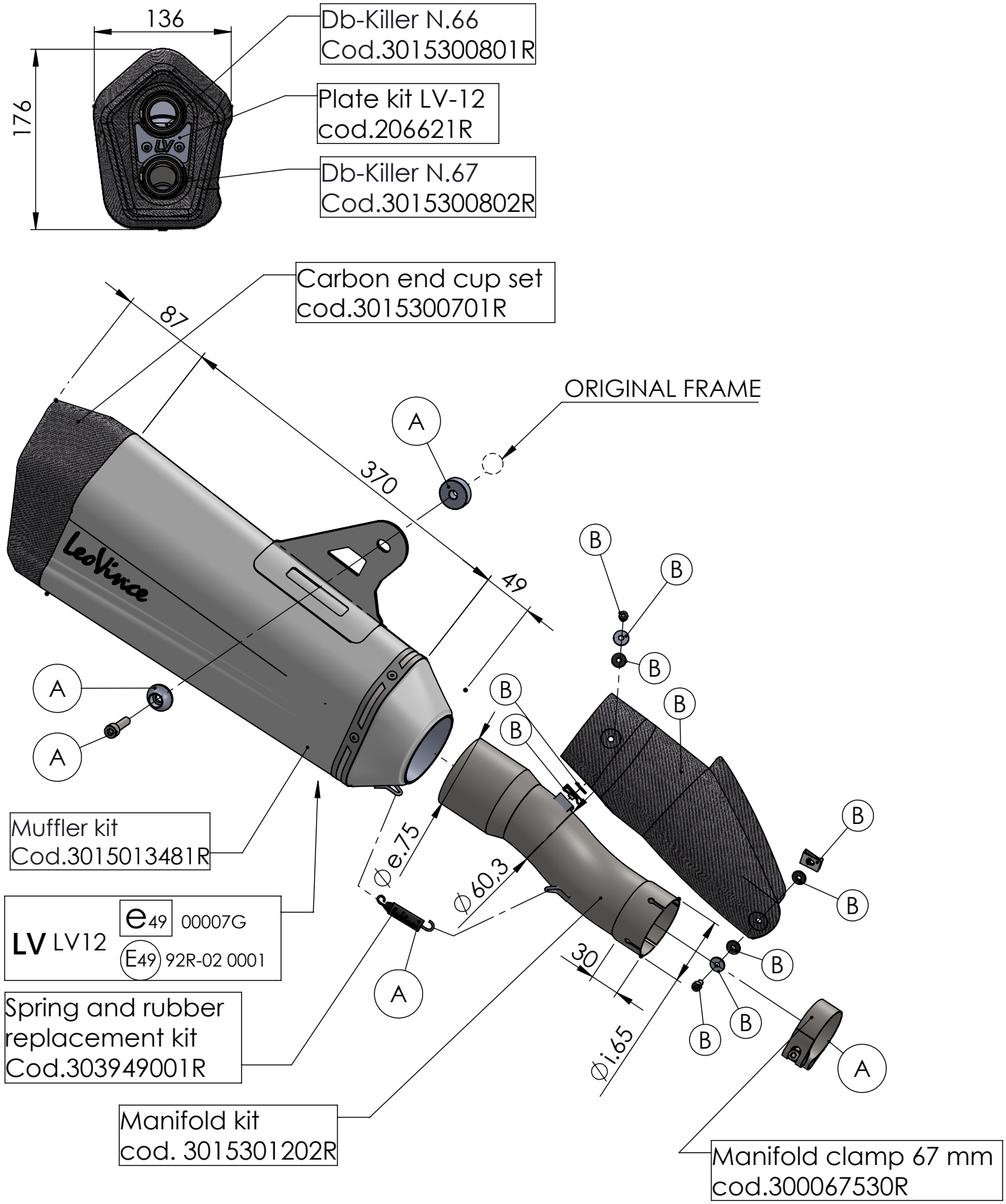


# ART. 15301 SPARE PARTS

BMW R 1200 GS / ADVENTURE - R 1250 GS / ADVENTURE
(Fits with original panniers)

(A) FITTING KIT cod.3015301601R
(B) CARBON COVER KIT cod.3015301001R