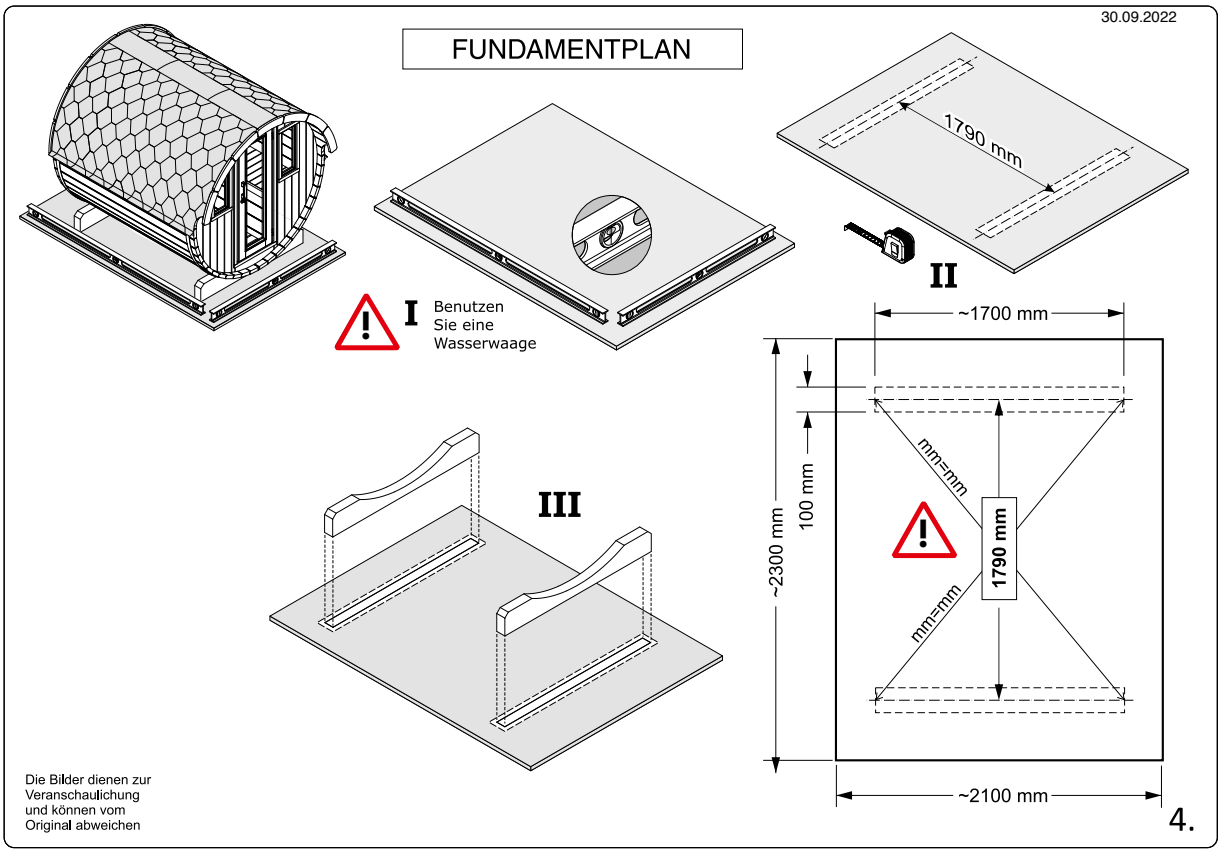

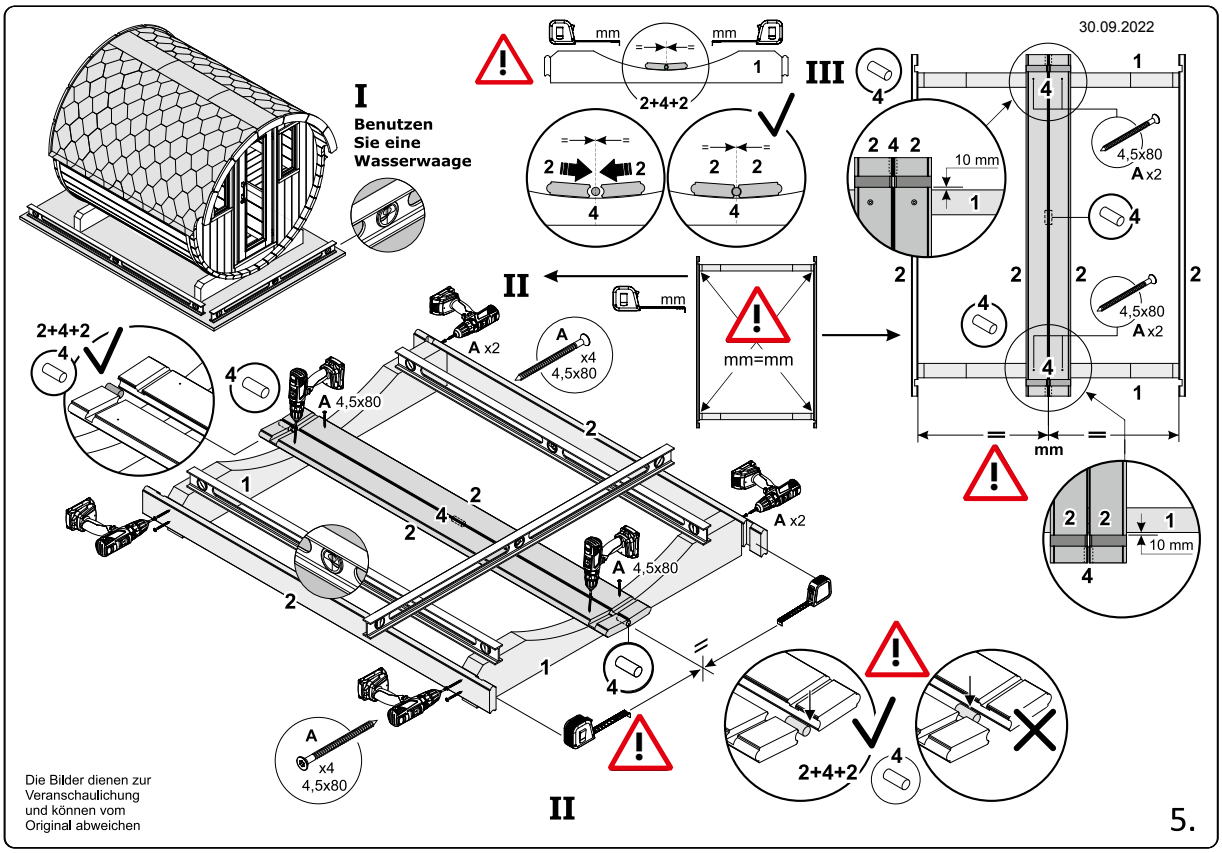

© 10/2022 Finnhaus Wolff